DIMENSIONAL DRAWING: 2D BCR-SE4720

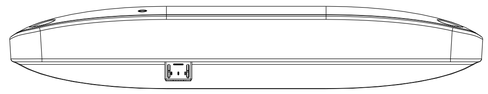

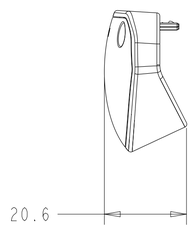

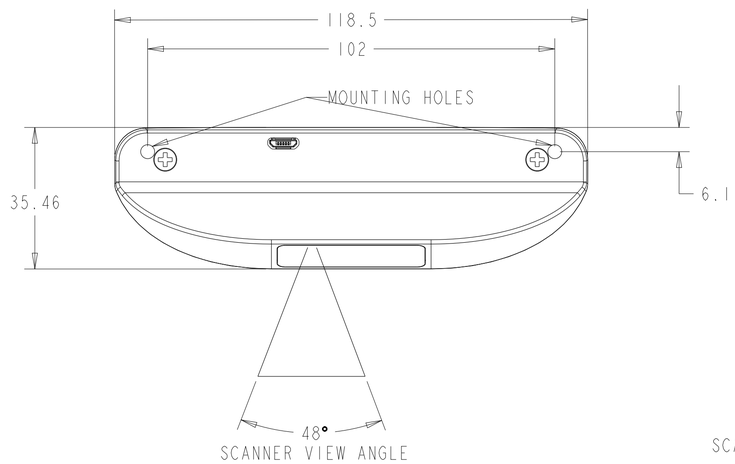

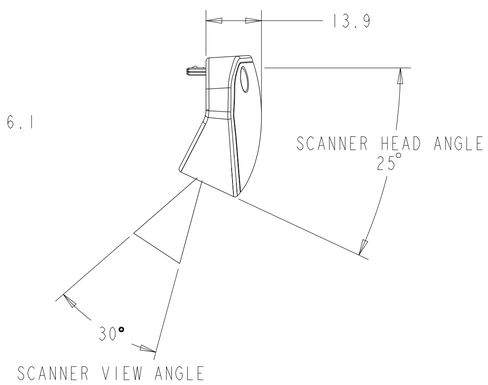

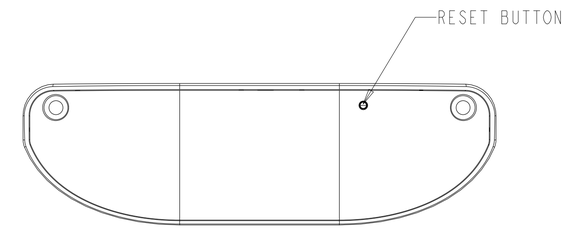

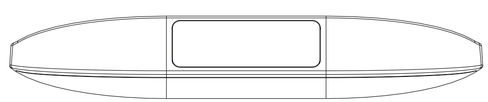

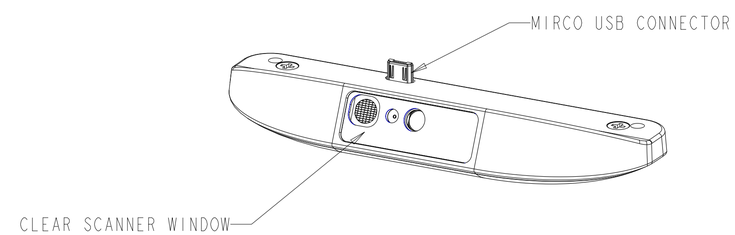

DIMENSIONS ARE IN MILLIMETERS

SHEET 1 OF 1

elo

MS602767
DATE: 04/30/2021
REV: A