TITLE: ET1919L

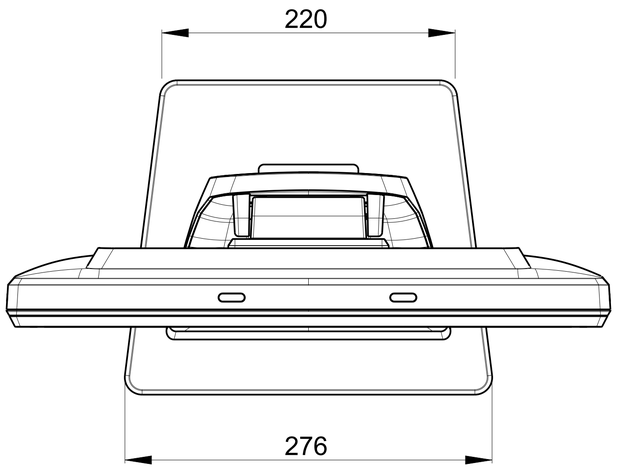

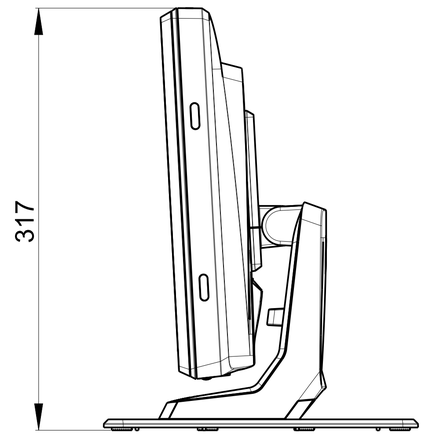

TILT: -3° FROM VERT

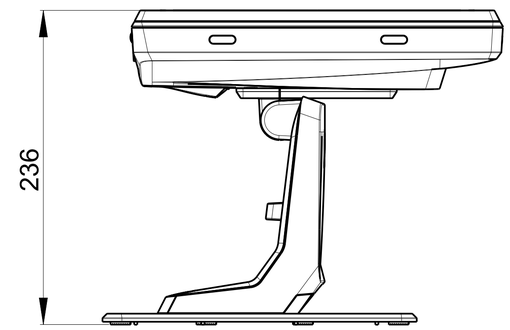

TILT: 90° FROM VERT

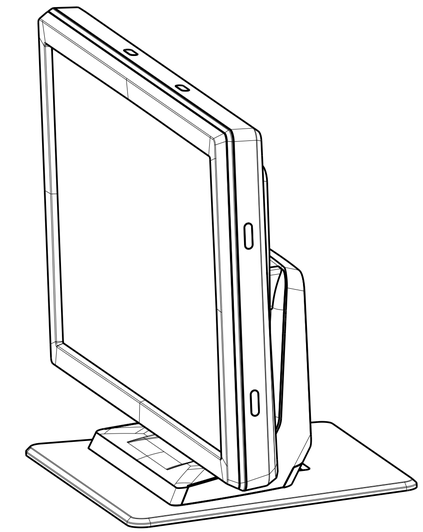

SCALE 0.4

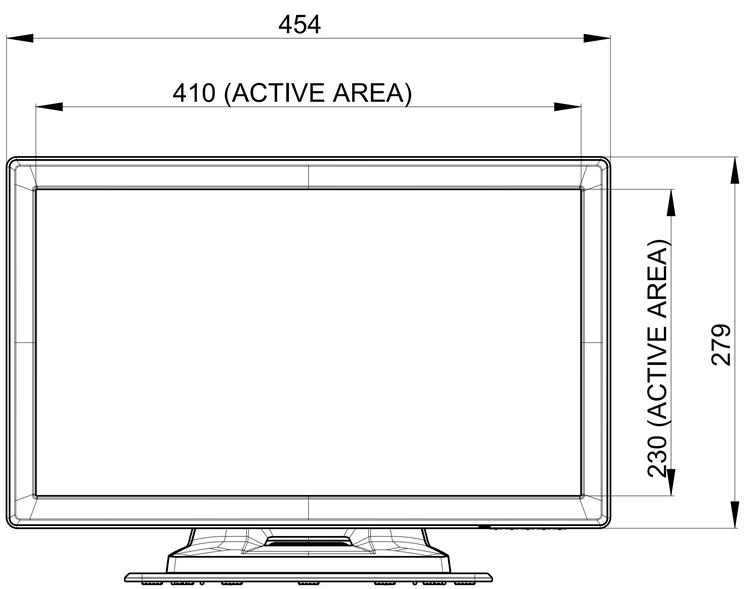

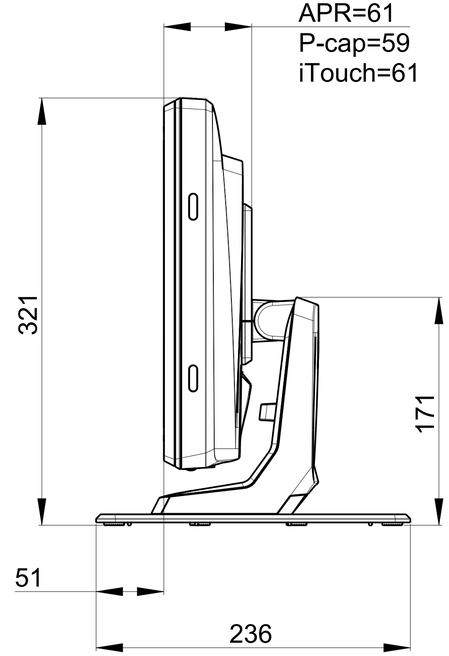

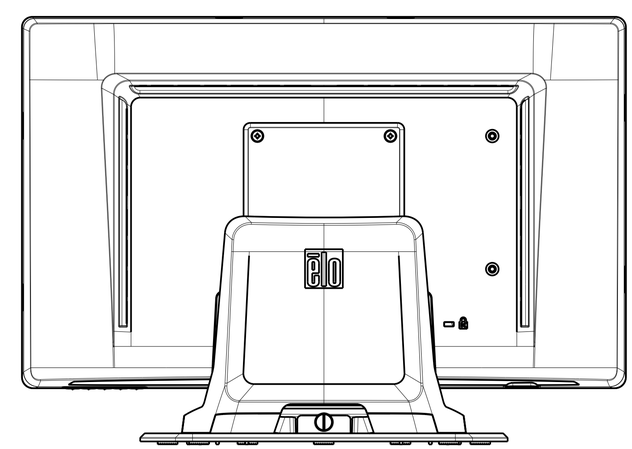

DIMENSIONS ARE IN MILLIMETERS/INCHES

SHEET 1 OF 4

elo TOUCH SOLUTIONS

MS600786
DATE: 9,28,13
REV: E

TITLE: ET1919L

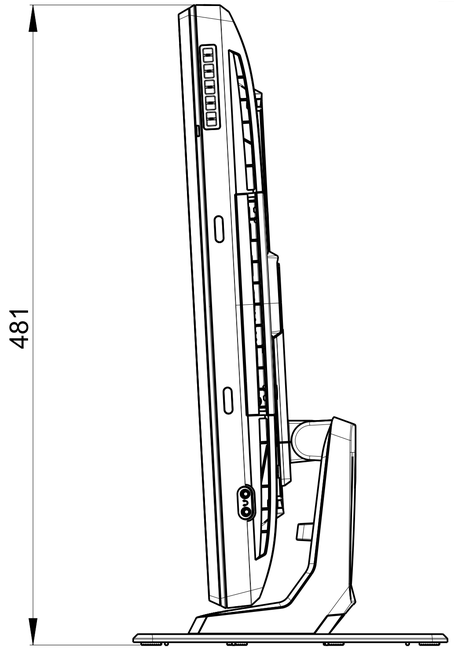

TILT: -3° FROM VERT

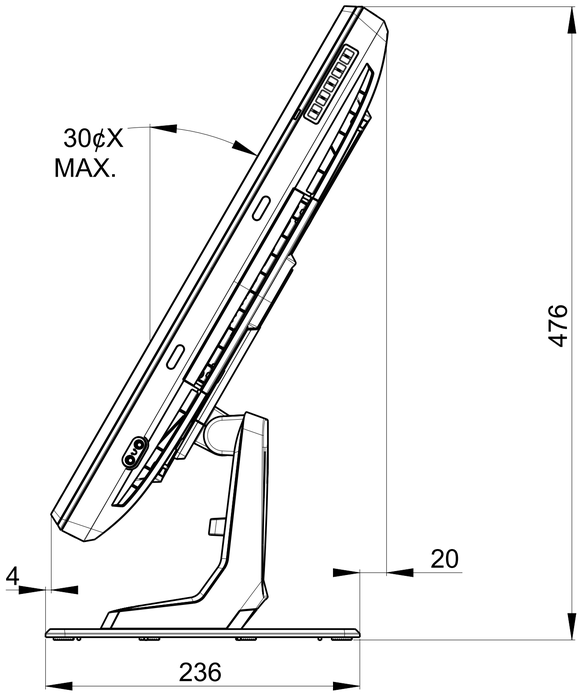

TILT: 30° MAX FROM VERT

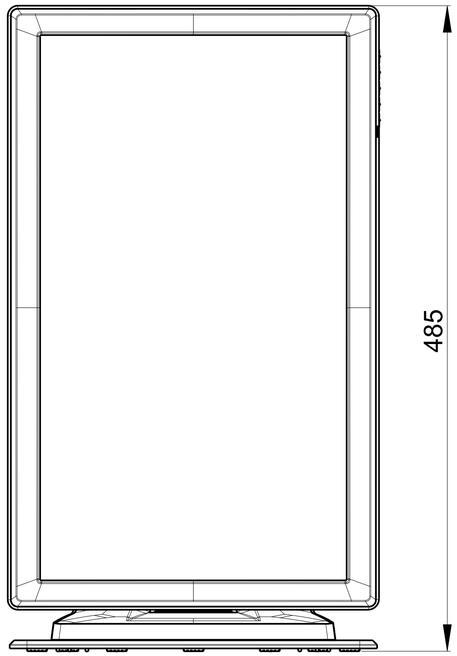

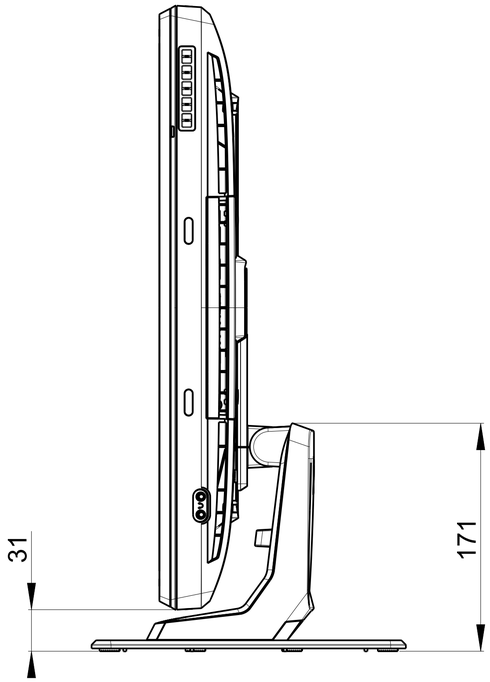

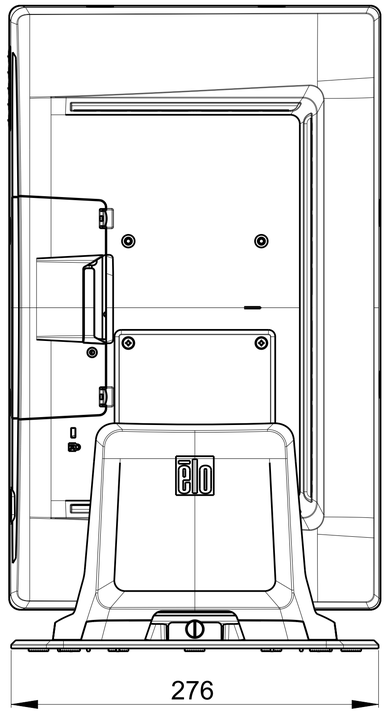

DIMENSIONS ARE IN MILLIMETERS/INCHES

SHEET 2 OF 4

elo TOUCH SOLUTIONS

MS600786
DATE: 9,28,13
REV: E

TITLE: ET1919L

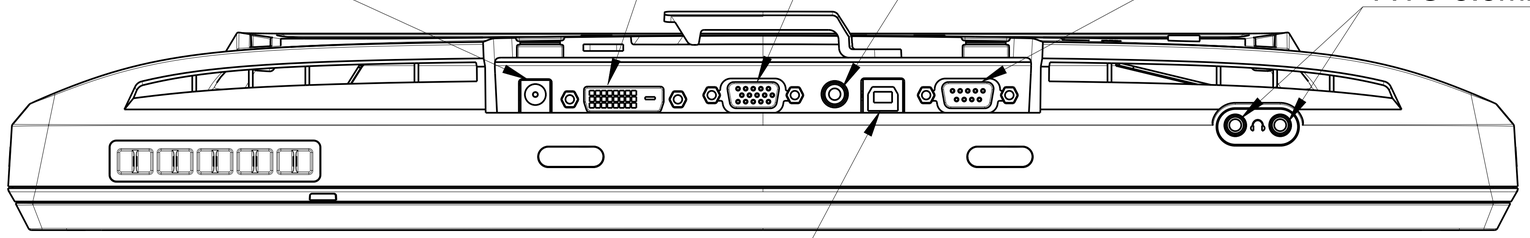

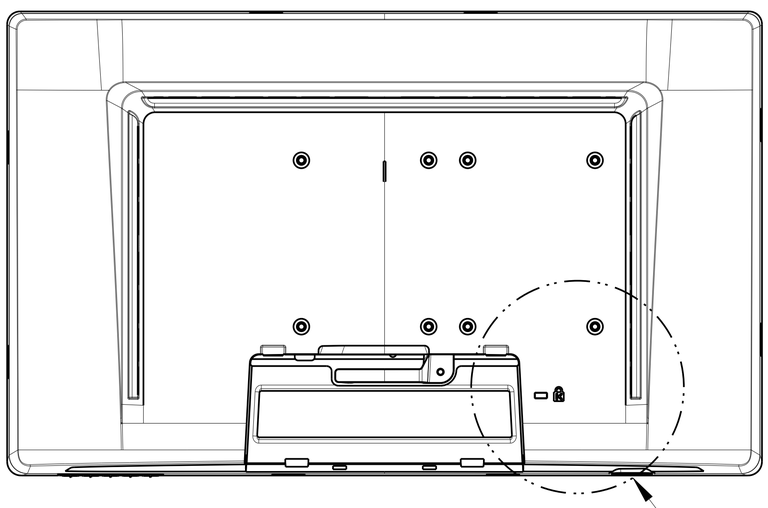

KENSINGTON LOCK DETAIL

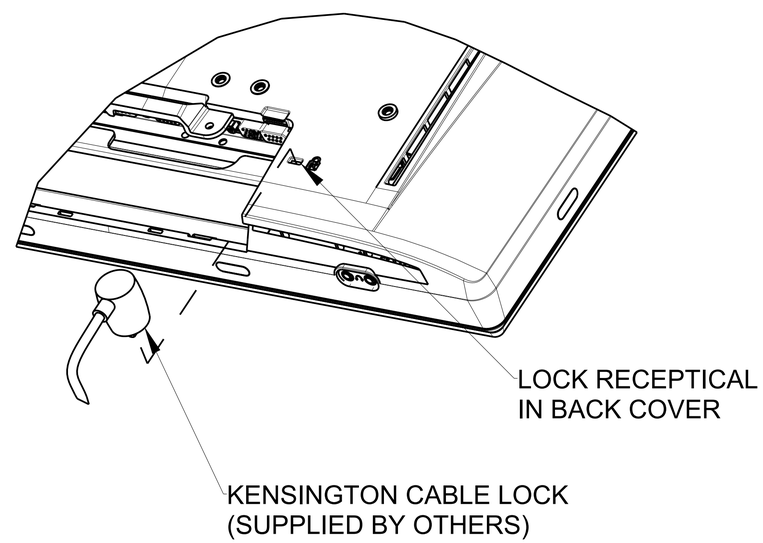

elo TOUCH SOLUTIONS

DIMENSIONS ARE IN MILLIMETERS/INCHES

SHEET 3 OF 4

MS600786
DATE: 9,28,13
REV: E

TITLE: ET1919L

VESA MOUNT

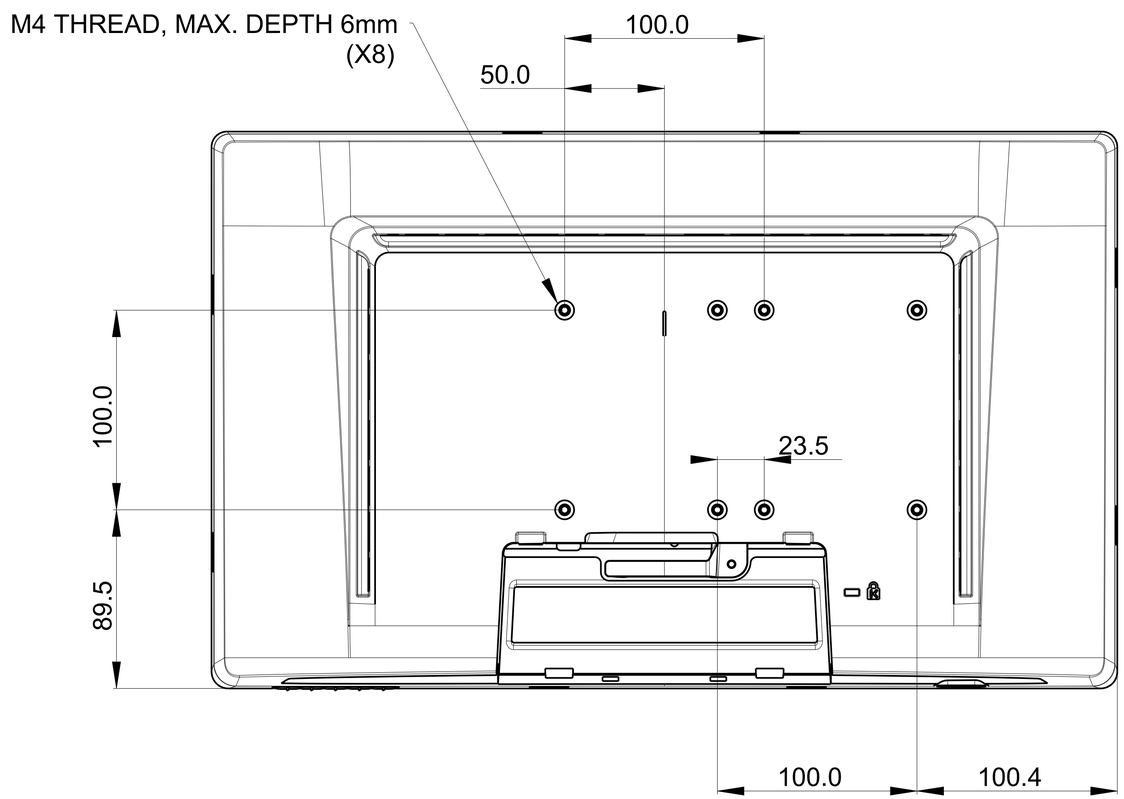

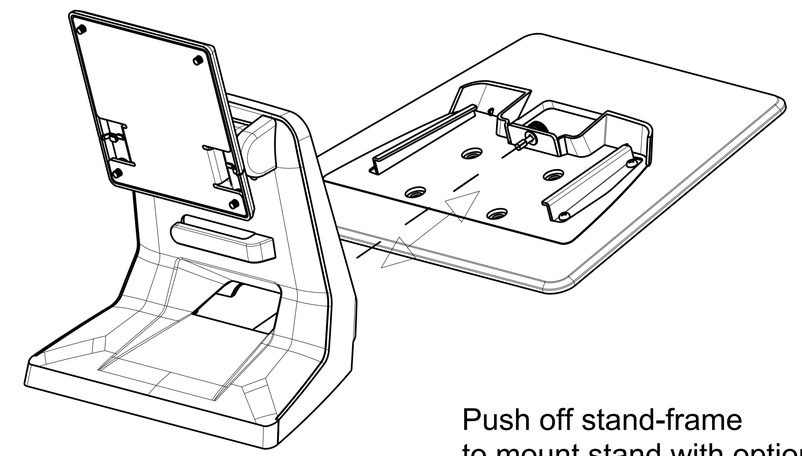

Push off stand-frame
to mount stand with option 1

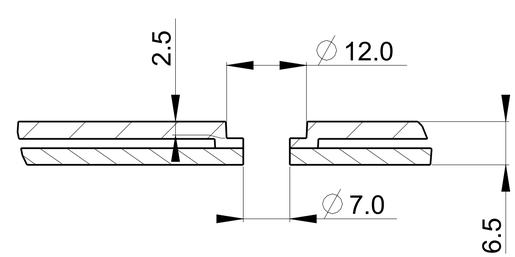

SECTION A-A
SCALE 2.0

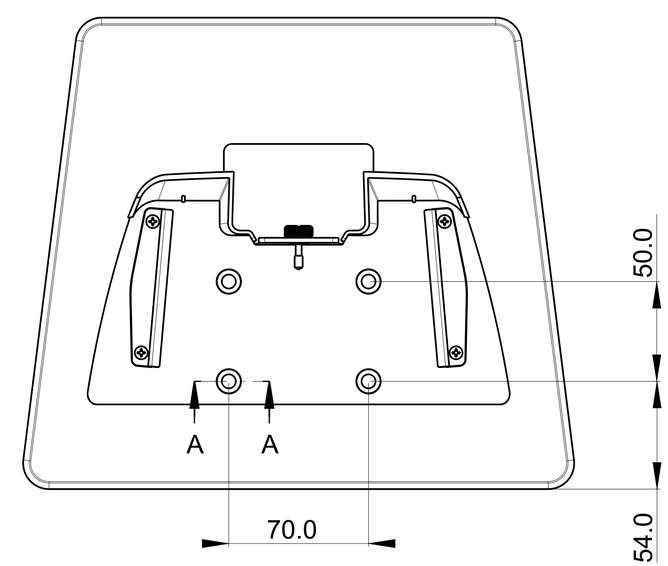

Top View

DIMENSIONS ARE IN MILLIMETERS/INCHES

SHEET 4 OF 4

elo TOUCH SOLUTIONS

MS600786
DATE: 9,28,13
REV: E