TITLE: ET2002

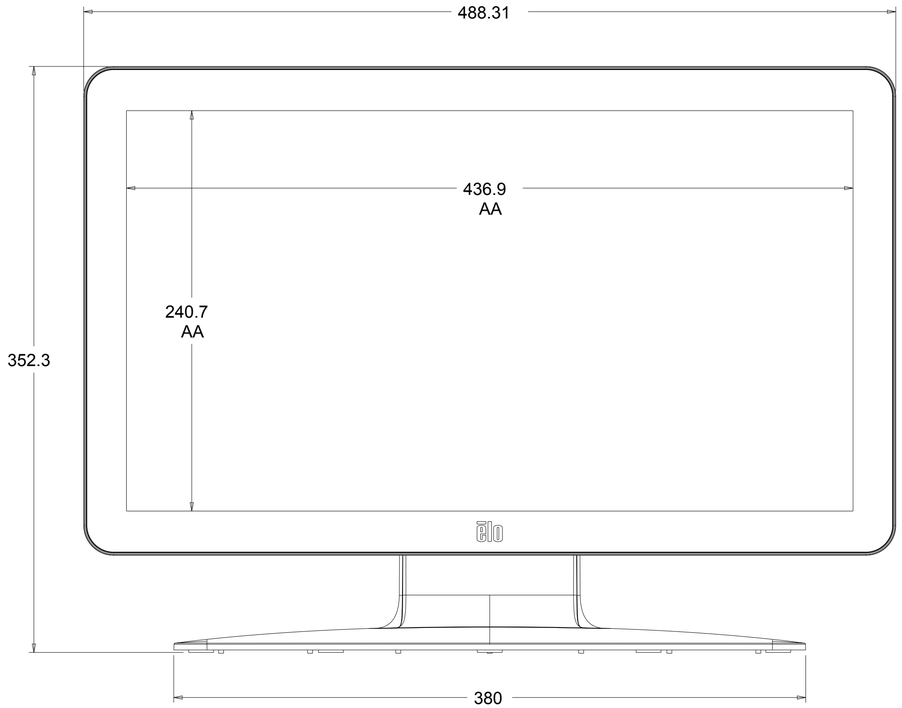

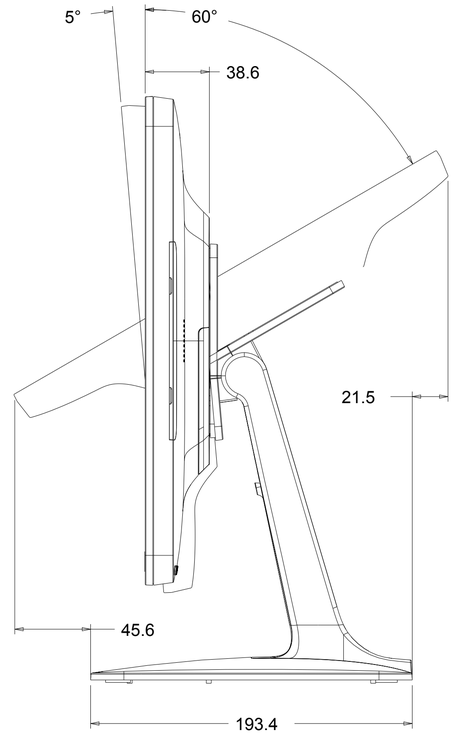

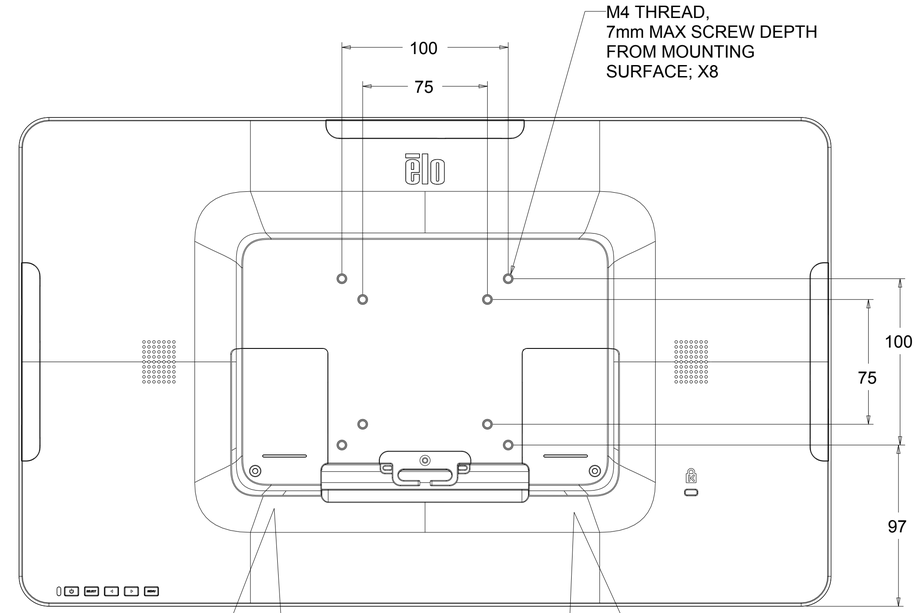

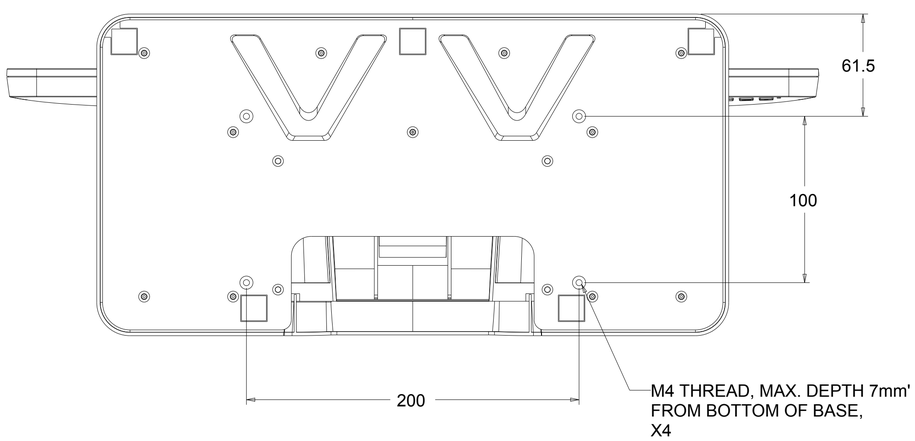

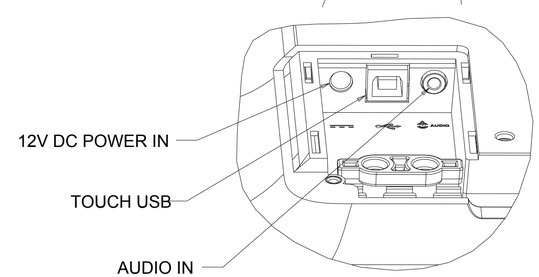

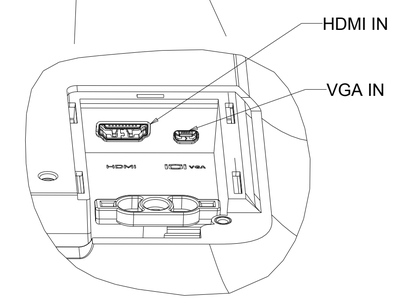

DIMENSIONS ARE IN MILLIMETERS

SHEET 1 OF 1

MS601774
DATE: 3/30/16
REV: A